Single Power Supply Single Buffer Gate with 3-State Output CMOS Logic Level Shifter

Description

The SN74LV1T125 is a single buffer gate with reduced input thresholds to support voltage translation applications.

Features

- Single-supply voltage translator at 5.0V, 3.3V, 2.5V, and 1.8V VCC
- Operating range of 1.8V to 5.5V
- Up translation:
  - 1.2V to 1.8V at 1.8V V_{CC}
  - 1.5V to 2.5V at 2.5V V_{CC}
  - 1.8V to 3.3V at 3.3V V_{CC}
  - 3.3V to 5.0V at 5.0V V_{CC}
- Down translation:
  - 3.3V to 1.8V at 1.8V V_{CC}
  - 3.3V to 2.5V at 2.5V V_{CC}
  - 5.0V to 3.3V at 3.3V V_{CC}
- Output drive:
  - 8mA output drive at 5V
  - 7mA output drive at 3.3V
  - 3mA output drive at 1.8V
- Characterized up to 50MHz at 3.3V V_{CC}
- 5V tolerance on input pins －40℃ to +125℃ operating
- Supports standard logic pinouts

Applications

- Telecom
- Portable applications
- Servers
- PC and notebooks

Order information

Mode	Package	Ordering Number	Packing Option
FLG74LV1T125	SOT-23-5	FLG74LV1T125YSOT235G/TR	Tape and Reel,3000
	SC70	FLG74LV1T125YSC70G/TR	Tape and Reel,3000

Pin Configuration

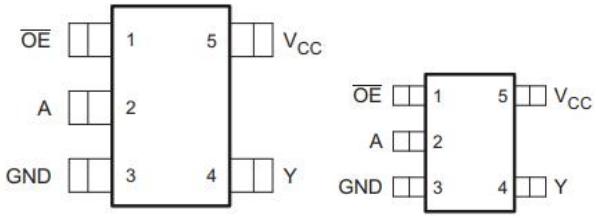

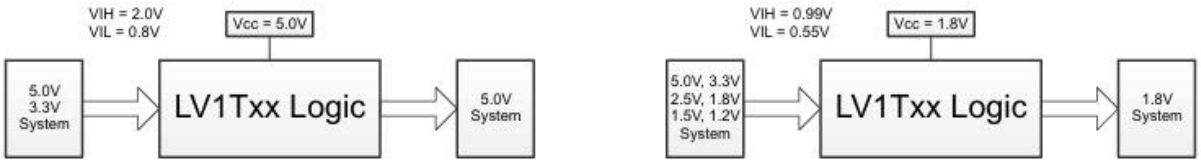

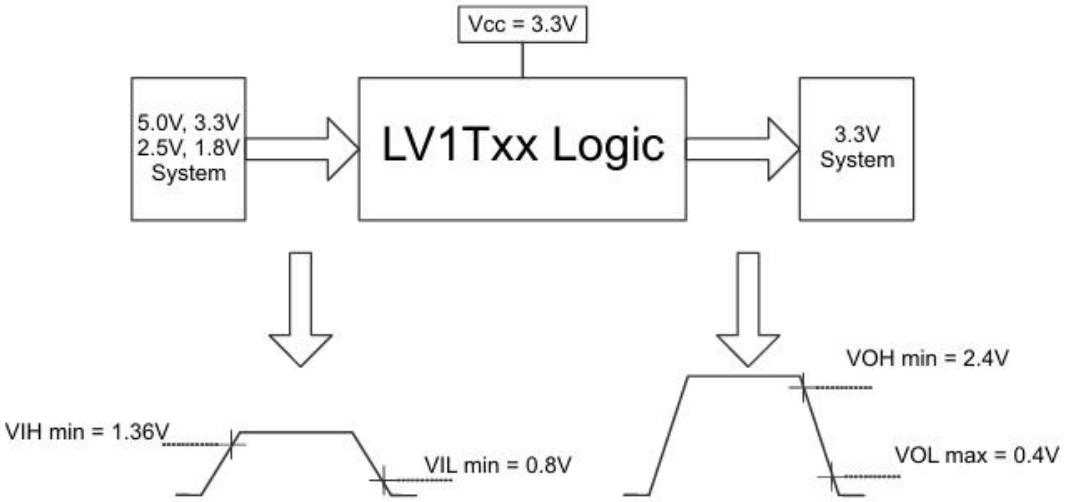

Switching Thresholds for 1.8-V to 3.3-V Translation

Pin Assignment

Pin Name	Pin No.	Pin Function
$\overline{OE}$	1	Input
A	2	Input
GND	3	Ground
Y	4	Output
VCC	5	Power Pin

Absolute Maximum Ratings (Note1)

- V_{CC} ---------- -0. 5V to + 7.0V
- V_I ---------- - 0. 5V t o + 7.0V
- V_O (Voltage range applied to any output in the high-impedance or power-off state) ---------- - 0. 5V to + 4. 6V
- V_O(Voltage range applied to any output in the high or slow state)---------- -0.5V to V_{CC}+0.5V
- Input clamp current ---------- -20mA
- Output clamp current ---------- ±20mA
- Continuous output current ---------- ±25mA
- Storage Temperature ---------- -65℃ to 150℃

Recommended Operating Conditions

Parameter	Symbol	Test Conditions	Min	Typ	Max	Units
Supply voltage	V_{CC}	Operating	1.6		5.5	V
Input voltage	V_I		0		5.5	V
Output voltage	V_O		0		V_{CC}	V
High- level output current	I_{OH}	V_{CC} = 1.8V			-3	mA
		V_{CC} = 2.5V			-5	
		V_{CC} = 3.3V			-7	
		V_{CC} = 5.0V			-8	
Low- level output current	I_{OL}	V_{CC} = 1.8V			3	mA
		V_{CC} = 2.5V			5	
		V_{CC} = 3.3V			7	
		V_{CC} = 5.0V			8	
Input transition rise or fall rate	△T/△V	V_{CC} = 1.8V			20	ns/V
		V_{CC} = 3.3V to 2.5V			20	
		V_{CC} = 5.0V			20	
Operating temperature	T_A		-40		125	℃

Electrical Characteristics

Parameter	Symbol	Test Conditions	Min.	Typ.	Max.	Unit
High- level input voltage	V_{IH}	V_{CC} = 1.65~1.8V	0.99			
		V_{CC} = 2.0V	0.99			
		V_{CC} = 2.25~2.5V	1.145			
		V_{CC} = 2.75V	1.22			
		V_{CC} = 3~3.3V	1.37			
		V_{CC} = 3.6V	1.47			
		V_{CC} = 4.5V~5.0V	2.02			
		V_{CC} = 5.5V	2.1			
Low- level input voltage	V_{IL}	V_{CC} = 1.65~2.0V			0.57	V
		V_{CC} = 2.25~2.75V			0.75	
		V_{CC} = 3~3.6V			0.8	
		V_{CC} = 4.5V~5.5V			0.8	
High- level output voltage	V_{OH}	V_{CC} = 1.65~5.5V, I_{OH}= -20uA	V_{CC}-0.1			V
		V_{CC} = 1.65V, I_{OH}= -2mA	1.28			
		V_{CC} = 1.8V, I_{OH}= -2mA	1.5			
		V_{CC} = 2.3V, I_{OH}= -3mA	2.0			
		V_{CC} = 2.5V, I_{OH}= -3mA	2.25			
		V_{CC} = 3.0V, I_{OH}= -3mA	2.78			
		V_{CC} = 3.0V, I_{OH}= -5.5mA	2.6			
		V_{CC} = 3.3V, I_{OH}= -5.5mA	2.9			
		V_{CC} = 4.5V, I_{OH}= -4mA	4.2			
		V_{CC} = 4.5V, I_{OH}= -8mA	4.1			
		V_{CC} = 5.0V, I_{OH}= -8mA	4.6			
Low- level output voltage	V_{OL}	V_{CC} = 1.65~5.5V, I_{OL}= 20uA			0.1	V
		V_{CC} = 1.65V, I_{OL}= 2.0mA			0.2	
		V_{CC} = 2.3V, I_{OL}= 3mA			0.15	
		V_{CC} = 3V, I_{OL}= 3mA			0.11	
		V_{CC} = 3V, I_{OL}= 5.5mA			0.21	
		V_{CC} = 4.5V, I_{OL}= 4mA			0.15	
		V_{CC} = 4.5V, I_{OL}= 8mA			0.3	
Input leakage current	I_I	V_{IN}= Vcc or GND, V_{CC} = 0~5.5V			0.1	uA
Supply current	I_{CC}	V_{IN}= V_{CC} or GND, I_{OUT}=0, V_{CC}=1.8~5.0V			1	uA
Additional supply current per input pin	$\triangle I_{CC}$	V_{CC}=5.5V, one input at 0.3V or 3.4 V,other input at V_{CC} or GND, I_{OUT}=0			1.35	mA
		V_{CC}=1.8V, one input at 0.3V or 1.1 V,other input at V_{CC} or GND, I_{OUT}=0			10	uA

Switching Characteristics

Parameter	From Input	To Output	Test Conditions	Min.	Typ.	Max.	Unit
T_{PD}	A	Y	V_{CC} = 5.0V		2.7	5.5	ns
			V_{CC} = 3.3V		4.0	7.0	
			V_{CC} = 2.5V		5.8	8.5	
			V_{CC} = 1.8V		10.5	13.0	
T_{en}	$\overline{OE}$	Y	V_{CC} = 5.0V		3.0	5.0	ns
			V_{CC} = 3.3V		4.0	6.5	
			V_{CC} = 2.5V		5.5	8.0	
			V_{CC} = 1.8V		9.0	12.0	
T_{dis}	$\overline{OE}$	Y	V_{CC} = 5.0V		4.2	6.5	ns
			V_{CC} = 3.3V		4.5	7.0	
			V_{CC} = 2.5V		5.0	11.0	
			V_{CC} = 1.8V		8.0	10.0	

Parameter Measurement Information

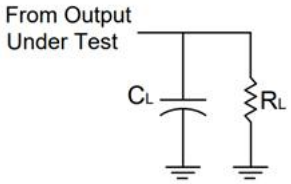

V_{CC}	INPUTS		V_M	C_L	R_L
	V_I	t_r/t_f			
1.8V ± 0.15V	V_{CC}	≦2ns	$V_{CC}/2$	15pF	1MΩ
2.5V ± 0.2V	V_{CC}	≦2ns	$V_{CC}/2$	15pF	1MΩ
3.3V ± 0.3V	3V	≦2.5ns	1.5V	15pF	1MΩ
5V ± 0.5V	V_{CC}	≦2.5ns	$V_{CC}/2$	15pF	1MΩ

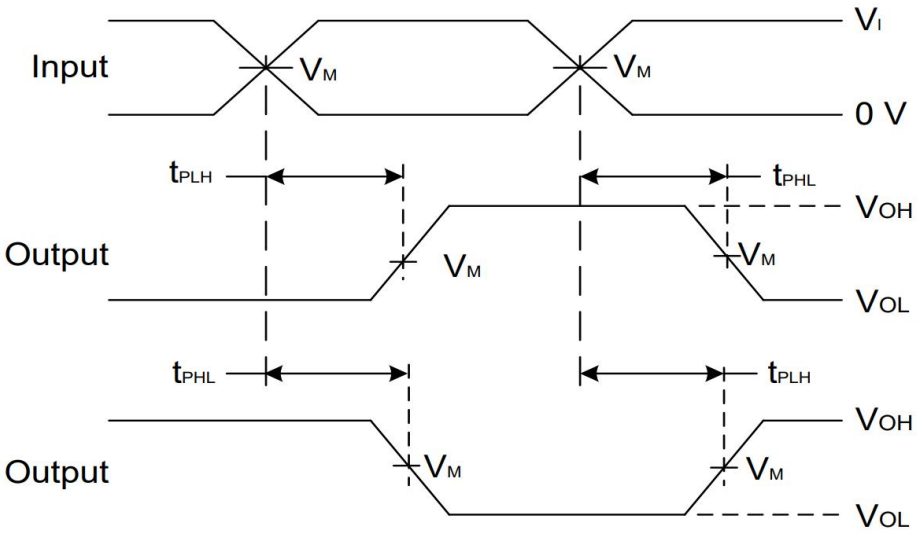

Voltage Waveform Propagation Delay Times

Inverting and Non Inverting Outputs

Notes: A. C_L includes probe and jig capacitance

B. All pulses and supplied at pulse repetition rate ≦ 10MHz

C. t_{PLH} and t_{PHL} are the same as t_{PD}

Package Information

(1) Package Type: SOT23-5

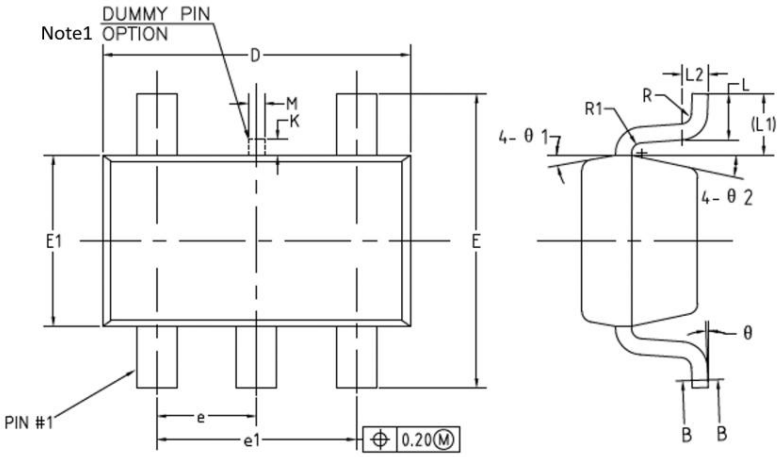

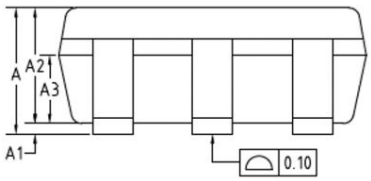

COMMON DIMENSIONS
(UNITS OF MEASURE=MILLIMETER)

	SYMBOL	MIN	NOM	MAX
	A	–	–	1.25
	A1	0	–	0.15
	A2	1.00	1.10	1.20
	A3	0.60	0.65	0.70
4	b	0.34	–	0.45
4	b1	0.34	0.38	0.41
4	c	0.12	–	0.20
4	c1	0.12	0.15	0.16
	D	2.826	2.926	3.026
	E	2.60	2.80	3.00
3	E1	1.526	1.626	1.700
	e	0.90	0.95	1.00
	e1	1.80	1.90	2.00
2	K	0	–	0.20
	L	0.30	0.40	0.60
	L1	0.59REF		
	L2	0.25BSC		
2	M	0.10	0.15	0.20
	R	0.05	–	0.20
	R1	0.05	–	0.20
	θ	0°	–	8°
	θ 1	8°	10°	12°
	θ 2	10°	12°	14°

Notes: 1. Dummy pin may differ or may not be present.

(2) Package Type: SC70

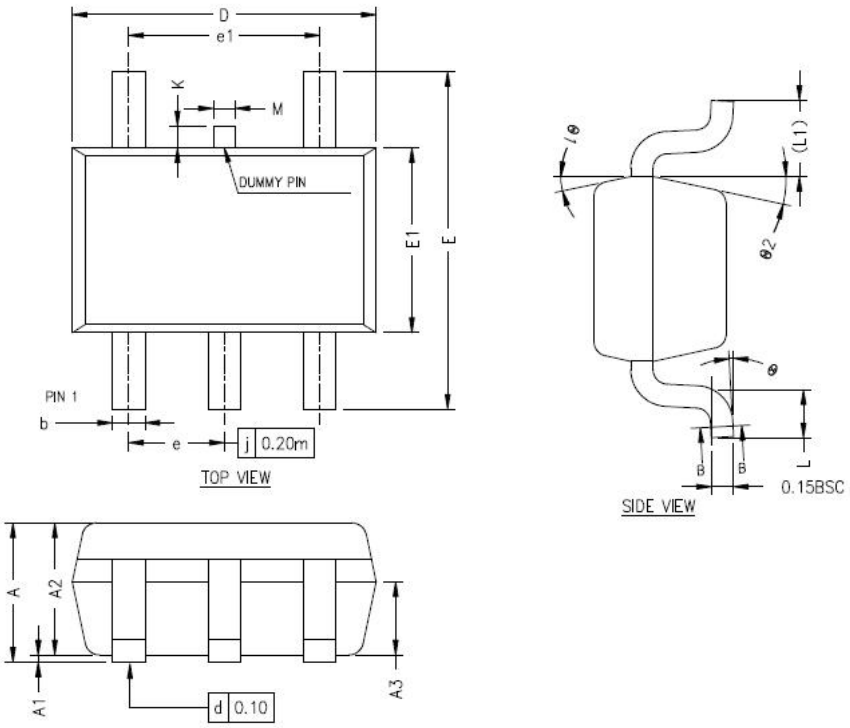

COMMON DIMENSIONS

(UNITS OF MEASURE=MILLIMETER)

	SYMBOL	MIN	NOM	MAX
	A	0.80	–	1.10
	A1	0	–	0.10
	A2	0.80	0.90	1.00
	A3	0.40	0.50	0.60
	b	0.17	–	0.30
	b1	0.17	0.22	0.25
3	c	0.12	–	0.20
3	c1	0.12	0.15	0.16
	D	2.02	2.07	2.12
	E	2.20	2.30	2.40
	E1	1.21	1.26	1.31
	e	0.60	0.65	0.70
	e1	1.20	1.30	1.40
	L	0.26	0.33	0.46
	L1		0.52REF	
2	M	0.10	0.15	0.20
2	K	0	–	0.20
	θ	0°	–	8°
	θ1	10°	12°	14°
	θ2	10°	12°	14°

Important Notice And Disclaimer

- We reserves the right to change the instruction manual without prior notice.
- Any semiconductor product has a certain possibility of failure or malfunction under specific conditions. The buyer is responsible for complying with safety standards and taking safety measures when using our products for system design and overall manufacturing to avoid potential failure risks that may cause personal injury or property damage.
- The improvement of product quality is endless, our company will be dedicated to provide customers with better products.